FABRICATION ENGINEERING

BOILER TUBE THERMAL STRESS CHECK

INPUT DATA 계산실행

1.THERMAL STRESS CALCULATION BETWEEN TUBE AND SHELL SIDE

* SHELL SIDE DESIGN PRESSURE (Ps)WELDING LENGTH	20	Kg/cm2
* TUBE SIDE DESIGN PRESSURE (Pt)	1.03	Kg/cm2
* GAS INLET TEMPERATURE(Gt)	244	0C
* WATER TEMPERATURE(Ts)	164	0C
* AMBIENT TEMPERATURE (To)	20	0C
* TUBE MEAN METAL TEMPERATURE, Tm	214	mm
* TUBE LENGTH (L)	2600	mm
* SHELL I.D (D)	3468	mm
* SHELL TH'K, Ts	16	mm
* TUBE O.D(d)	63.5	mm
* TUBE TH'K(PLAIN TUBE), Tt	3.2	mm
* TUBE Q'TY(PLAIN TUBE),(n)	815	mm
* TUBE TH'K(STAY TUBE), ST	6	mm
* TUBE Q'TY(STAY TUBE),n2	71	mm
* STAY BAR Q'TY	10	mm
* STAY BAR O.D	65	mm
* Ys=THE COEFFICIENT OF SHELL LINEAR EXPANSION	0.00001166	mm
* Yt=THE COEFFICIENT OF TUBE LINEAR EXPANSION	0.00001196	mm
* Es=MODULUS ELASTICITY OF SHELL AT 170 OC	20646	mm
* Et=MODULUS ELASTICITY OF TUBE AT 250 OC	20373	mm

2. LOCAL STRESS CHECK IN PLANE TUBE AT TUBE SHEET

* POLAR MOMENT OF INERTIA, J	55.3	mm
* RESULTANT FORCE PERPENDICULAR TO Fs	0	mm
* RESULTANT BENDING MOMENT ON THE TUBE, Mb	0	mm
* TORSSIONAL MOMENT ABOUT THE TUBE AXIS, Mt	0	mm
* ALLOWABLE STRESS OF TUBE(Sn)	1055	Kg/cm2

RESULT OF CALCULATION

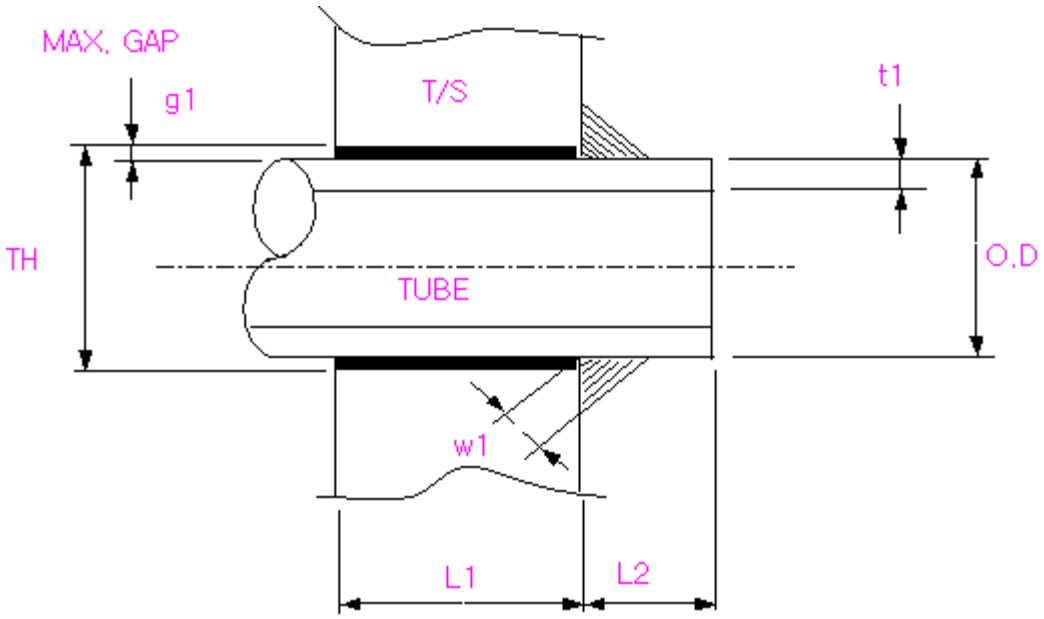

http://www.pes21.com

1. THERMAL STRESS CALCULATION BETWEEN TUBE AND SHELL SIDE

** Qs=SHELL SIDE STRESS=(-F1+F2)/As	62,416,119	Kgf/mm2
** Qt=TUBE SIDE STRESS=(F1+F3)/At	-20,775,672	Kgf/mm2
** As=SHELL SECTION AREA	173,516	mm2
** At=PLAIN TUBE SECTION TOTAL AREA	520,272	mm2
** Dt= TEMPERATURE DIFFERENCE BETWEEN SHELL AND TUBE	50	o
** K1=EXPANSION DIFFERENCE BETWEEN SHELL AND TUBE @ SHUT-DOWN CASE, K1= {(Ys(Ts-To)-Yt(Tt-To)}L	-2.60	mm
** K2=EXPANSION DIFFERENCE BTM SHELL AND TUBE, K2= {YsxDt)-(YtxDt)}L @AT OPERATING CASE	-1.55	mm
** THERMAL STRESS(F1)=(K1*As*At*Es*Et)/ {(As*Es+At*Et)}L, DUE TO THERMAL EXPANSION AT SHUT-DOWN CASE	-18,099,785,413,44	Kgf
** THERMAL STRESS(F1')=K2((*As*At)+(Es*Et))/ {(As*Es+At*Et)}L, DUE TO THERMAL EXPANSION AT OPERATING CASE	-10,819,613,148,43	Kgf
** THERMAL STRESS(F2)=(W*As*Es)/(As*Es)+(At*Et), SHELL SIDE STRESS DUE TO PRESSURE DIFFERENCE BETWEEN SHELL AND TUBE SIDE	10,600,883,481	Kgf
** THERMAL STRESS(F3)=W*At*Et/(As*Es)+(At*Et), TUBE SIDE STRESS DUE TO PRESSURE DIFFERENCE BETWEEN SHELL AND TUBE SIDE	10,603,573,107	Kgf
** W=π/400(D^2-nd^2)Ps+(3.14)*n/400(d-2t)^2*Pt	1,373,128	Kgf
** Ss = -F1+F2/As =SHELLSIDE STRESS	10,819,613,178,98	Kgf/mm^
** St = F1+F3/Atp = TUBE SIDE STRESS	-10,819,613,138,2	Kgf/mm^
** STRESS DIFFERENCE = Ss+St		Kgf/cm^2

	407	

2. LOCAL STRESS CHECK IN PLANE TUBE AT TUBE SHEET DUE TO INTERNAL PRESS & EXTERNAL PRESS & THERMAL STRESS

** CROSS-SECTION AREA,Ar	6.1	cm2
** FORCE PARALLEL TO THE TUBE AXIS, Fx	2,470	Kg
** MOMENT OF INERTIA, I=(0.049(D4-d4)	27.6	cm^4
1) STRESS DUE TO THERMAL LOAD		
** SHEAR STRESS, Kn=(Mt*ro/J)+(2*Fs/Ar)	0.0	Kg/cm^2
** LONG. STRESS,Si = (Mb*ro/I)+(Fx/Ar)	407.4	Kg/cm^2
2) STRESS DUE TO PRESSURE LOAD		
** HOOP STRESS, Hs=P*{ro/tn-0.4}	190.4	Kg/cm^2
** LONG. STRESS, Pi =Hs/2	95.2	Kg/cm^2
3) TOTAL STRESS--MAXIMUM SHEAR THEORY		
= 0.5*[Si+Pi+Hs)±{(Si+Pi-Hs)^2+4*Kn^2}^0.5	658.7	Kg/cm^2
** CALCULATION RESULT !!!	Satisfactory!	

MENU PAGE-->>

Copyright © 2001 피이에스21 All rights reserved.
Please contact E-mail ***pes21@pes21.com***